RTCA, Inc.
1828 L Street, NW
Suite 805
Washington, DC 20036
Telephone: 202-833-9339
Fax: 202-833-9434
www.rtca.org

STATEMENT OF
MARGARET T. JENNY
PRESIDENT, RTCA, INC.

Before a Joint Hearing of the

U. S. HOUSE OF REPRESENTATIVES
COMMITTEE ON TRANSPORTATION AND INFRASTRUCTURE
SUBCOMMITTEES ON AVIATION
and
COAST GUARD AND MARITIME TRANSPORTATION
on

GPS RELIABILITY: A REVIEW OF AVIATION INDUSTRY PERFORMANCE, SAFETY ISSUES, AND AVOIDING POTENTIAL NEW AND COSTLY GOVERNMENT BURDENS

WASHINGTON, D.C.
June 23, 2011

INTRODUCTION

Good morning, Chairmen Petri and LoBiondo; Ranking members Costello and Larsen; and Members of the Subcommittees. My name is Margaret Jenny, President of RTCA, Inc. Thank you for inviting me to participate in today's hearing on "GPS Reliability: A Review of Aviation Industry Performance, Safety Issues, and Avoiding Potential New and Costly Government Burdens."

RTCA BACKGROUND

RTCA is a not-for-profit association founded in 1935 and utilized as a Federal advisory committee. We are the premier Public-Private Partnership venue for developing consensus among diverse, competing interests on critical aviation modernization issues in an increasingly global enterprise.

RTCA works closely with the Federal Aviation Administration (FAA) to develop comprehensive, industry-vetted and endorsed recommendations for the government on issues ranging from technical performance standards to policies for air transportation. Our deliberations are open to the public and our products are recommendations, developed by aviation community volunteers functioning in a consensus-based, collaborative, peer-reviewed environment.

RTCA provides two categories of recommendations to the government: (1) policy and investment priorities to facilitate implementation of air traffic management system improvements, and (2) minimum performance standards, reports, and guidance documents used by the FAA as a partial basis for the certification of equipment.

OVERVIEW

My testimony today will summarize the findings of a study conducted by RTCA on the impact of the proposed LightSquared terrestrial wireless broadband network on GPS receivers onboard aircraft. The RTCA report identified specific adverse effects on the use of GPS in aviation.

In my role as President of RTCA, I am here today to present the consensus findings of Special Committee 159 (SC-159), and not my views or even the views of individual members of the committee. The time-honored RTCA process is designed to welcome all views to the table, and work through to a consensus or, in cases where a consensus cannot be reached, to include a minority report. In the case of the LightSquared study, the committee, which included members from LightSquared, was able to make some compromises to reach a consensus and that consensus is what I will discuss today.

RTCA LIGHTSQUARED REPORT OVERVIEW

In a letter (Appendix A) dated March 3, 2011, from Robert A. Frazier, Acting Group Manager, Spectrum Engineering Services, FAA, RTCA was requested to conduct a study (Appendix B - Executive Summary) to address the issue of compatibility between operation of a terrestrial wireless broadband network in the bands 1525-1559/1626.5-1660.5 megahertz (MHz) by LightSquared, pursuant to its FCC Order and Authorization, DA 11-133, January 26, 2011, and GPS receivers onboard aircraft utilizing the GPS Link 1 (L1)[1] signal centered on 1575.42 MHz for navigation and positioning within the National Airspace System.

This Tasking was assigned to RTCA SC-159, Global Positioning System, under the leadership of Co-Chairs Chris Hegarty, The MITRE Corporation, and George Ligler, Project Management Enterprises. The Special Committee, originally formed in 1985, has over two-decades of experience resolving issues associated with GPS and conducts its work in accordance with the requirements of the Federal Advisory Committee Act (FACA), which allows for an open, participatory process. During the months of March through June of this year, the members of SC-159 developed a document titled "*Assessment of the LightSquared Ancillary Terrestrial Component Radio Frequency Interference Impact on GNSS L1 Band Airborne Receiver Operations*." The study was released on June 3, 2011 as RTCA Document 327 (DO-327). It concludes that the current LightSquared terrestrial authorization would be incompatible with the current aviation use of GPS; however, modifications could be made to allow the LightSquared system to co-exist with aviation use of GPS. As previously mentioned, the committee welcomed new members from LightSquared to participate in the development of this report, and they are a part of the final consensus documented in the report.

Adhering to the scope of the request from the FAA, the report addresses the issue of compatibility between the proposed operation of a terrestrial wireless broadband network in the bands 1525-1559/1626.5-1660.5 MHz by LightSquared, pursuant to its Federal Communication Commission (FCC) license, and GPS receivers onboard aircraft. The report addresses the issues analytically, based on existing domestic and international standards and incorporates the test results of four certified aircraft GPS receivers.

The RTCA study assumed the spectrum deployment plan illustrated below for the base stations within the proposed LightSquared terrestrial wireless broadband network. In the first spectrum deployment phase, Phase 0, the base stations would transmit within a 5 MHz channel from 1550.2-1555.2 MHz. Phase 1 would add to Phase 0 a second 5 MHz channel from 1526.3-1531.3

[1] The L1 center frequency is 1575.42 MHz.

MHz. During Phase 2, the two channels would be broadened from 5 MHz each to 10 MHz each, spanning 1526-1536 MHz for the lower channel and 1545.2-1555.2 MHz for the upper channel. These base station transmissions are in a frequency band just below the frequency band that contains the L1 frequency used by Civil Aviation and the base station transmissions are planned[2] to be at a radiated power level of 1.6 kilowatts per channel per base station sector. Importantly, the RTCA assessment was based strictly upon LightSquared's deployment plans as provided to RTCA by LightSquared representatives who participated in the consensus development of DO-327. As outlined in Section 2.4 of the report, the FCC authorization permits higher power levels, which would make the results far worse if they were considered.

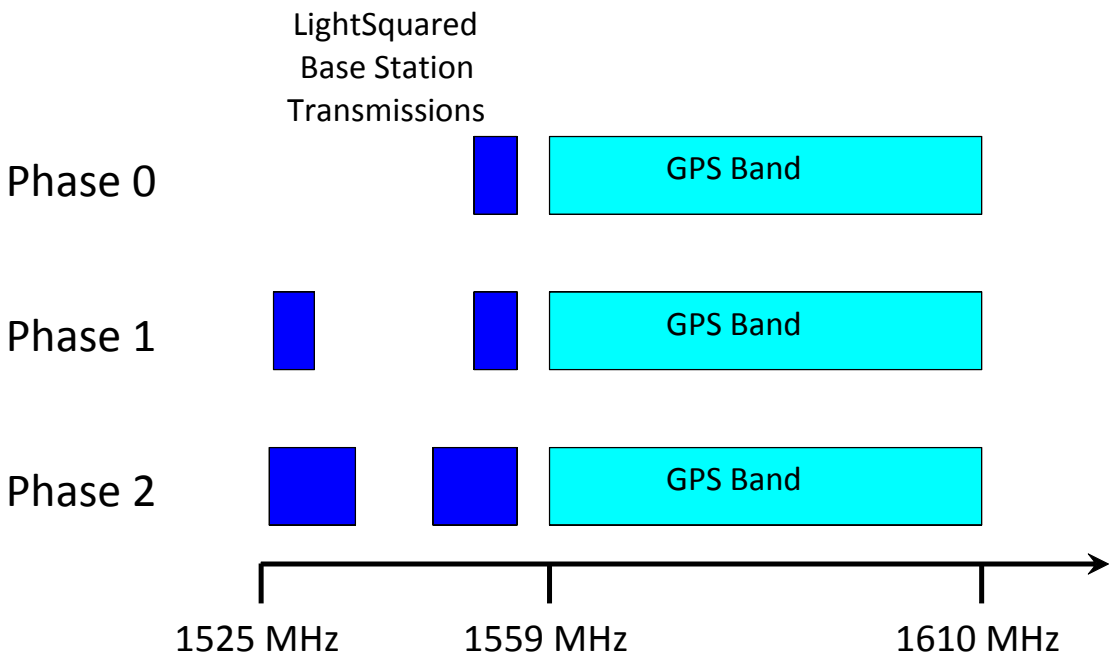

As the LightSquared participants on the committee explained the plans, LightSquared is planning to deploy approximately 36,000 base stations throughout the United States, covering hundreds of millions of people, and an important component of the RTCA study was to assess the aggregate LightSquared signal power that would be seen from all visible base stations by a GPS receiver on an aircraft in various typical operational scenarios. These scenarios included high altitude cruise, low altitude cruise, precision approach, and airport surface operations. The received power assessment was conducted using data provided by LightSquared regarding the technical characteristics of their base station antennae and the densities of base stations to be deployed in urban, suburban, and rural environments.

[2] The FCC license allows up to 16 kW per sector.

To evaluate the impact of the LightSquared base station transmissions on GPS avionics, the aggregate received power levels were compared to allowable interference limits, which were derived from: (1) applicable domestic and international regulations, including RTCA Minimum Operational Performance Standards (MOPS) referenced below, and (2) standard spectrum management practices. In 1991, RTCA completed GPS MOPS for avionics to support the introduction of GPS into civil aviation which was declared an operational capability for civil aviation in 1993. The FAA has invoked these MOPS in various Technical Standard Orders (TSOs) that are used as a basis for equipment certification. The latest suite of GPS MOPS includes RTCA/DO-316 for stand-alone GPS avionics, RTCA/DO-229D for GPS avionics augmented by the Wide Area Augmentation System (WAAS)[3], and RTCA/DO-253C for GPS avionics augmented by the Local Area Augmentation System (LAAS)[4].

All three of these MOPS include the same requirements for receiver interference susceptibility, and are harmonized with the requirement levied within the International Civil Aviation Organization (ICAO) Standards and Recommended Practices (SARPs). The ICAO SARPS are used by numerous foreign civil aviation authorities as a basis for equipment certification. These global standards help ensure that the same receiver onboard an aircraft will work in flight anywhere around the globe. These interference requirements, as applicable to the LightSquared base station transmissions, have not changed materially since they were first published in 1996 in the initial issuance of RTCA/DO-229. GPS avionics have been certified using the DO-229 interference requirements (with performance requirements from earlier MOPS) since 1997, and the first-generation of airborne equipment built in complete conformance with the DO-229 MOPS certified by the FAA in 2002.

The MOPS interference requirements dictate that certified equipment must meet all applicable performance requirements, as demonstrated through testing, in the presence of specified interference power levels. These power levels generally become larger for interference center frequencies that are further removed from the GPS L1 frequency. Since the interference power level that can be tolerated by a MOPS-compliant receiver is greater as the center frequency of the interference becomes further away from L1, the receiver will be more susceptible to disruption from channels which are closer to the L1 frequency.

[3] WAAS is a navigation aid introduced by the FAA to augment GPS with the goal of improving its accuracy, integrity, and availability.

[4] LAAS is an all-weather landing system based on GPS that improves integrity and accuracy of the signal in the vicinity of an airport, enabling precision approaches.

Importantly, the implication of these requirements is that airborne GPS receivers are expected to be more susceptible to disruption from the upper LightSquared channels than the lower LightSquared channels.

Aviation spectrum management practices aim to ensure that GPS avionics never experience interference from transmissions that are right at the maximum power level for which the GPS receivers have been tested. Consistent with this practice (see, e.g., the International Telecommunication Union Radiocommunication Sector [ITU-R]'s Recommendation M.1477), the RTCA study used interference power limits that were the MOPS test levels adjusted by a standard safety margin.

REPORT CONCLUSIONS

The study concludes that all three spectrum deployment phases described above for the planned LightSquared terrestrial are incompatible with the current aviation use of GPS. However, use of a single 5 MHz lower channel could allow the LightSquared system to co-exist with aviation's use of GPS.

The impact of a LightSquared upper channel spectrum deployment is expected to be complete loss of GPS receiver function. The LightSquared upper channel interference from Phase 0 deployment exceeds the GPS receiver MOPS-related environmental limit by a factor ranging from 18,000 to 380,000, depending upon the operational scenario involved. Because of the size of the single-city station deployment, GPS-based operations below about 2000 feet will be unavailable over a large radius from the metro deployment center (assuming no other metro deployments are nearby). This means that, since the GPS receiver will not be able to provide a position with any sort of continuity (if at all), GPS-based operations cannot be undertaken. Given the situation in the high altitude U.S. East Coast scenario, GPS-based operations will likely be unavailable over a whole region at any altitude at which aircraft normally fly.

The results of this study indicate that terrestrial base station operation at the lower 5 MHz-wide channel (1526.3-1531.3 MHz) is compatible with aviation GPS operations for all the representative scenarios (including both signal tracking and initial acquisition). Initial acquisition is acquiring enough satellites in the constellation to provide an initial GPS-based position, and signal tracking generally refers to tracking GPS satellites as they and the aircraft move to continue to be able to provide a GPS-based position for the aircraft.

The study indicates that for terrestrial base stations using only the lower 10 MHz channel at 1526-1536 MHz, there is a small positive margin for GPS tracking (but not necessarily initial acquisition) in the presence of mean aggregate terrestrial network interference. As noted

above, these conclusions are based upon specific assumptions about LightSquared operation and worse impacts would result if the LightSquared network was operated at the limits allowed per the FCC authorization. The specific assumptions include geographical distribution of base stations, base station transmission frequencies, and base station transmit power levels which are below those in the current FCC authorization. Two examples: The study assumed LightSquared base station towers at 1.6 kW per channel per sector, whereas the FCC license allows up to 16 kW per sector. Also, the number of base stations per unit area was limited per the model provided by LightSquared for this study, whereas the FCC license does not limit the density.

EVALUATION OF POSSIBLE MITIGATION

Unlike the receivers used for many non-aviation GPS applications, the airborne GPS receivers typically use multiple separate filters (for example, there are generally two filters in the antenna) and are generally considered quite robust to out-of-band interference. But, they still are adversely affected by emissions in the LightSquared band. Should LightSquared deploy as planned, many aviation receivers would be completely inoperable over very large swaths of airspace meaning that, in general, the receivers would be unable to provide a GPS position.

Airborne GPS receiver mitigations were also explored in the report, but the findings indicate that the only viable option is through invocation of more stringent performance requirements for the GPS antenna/receiver combination that would require the manufacturers to optimally layer filtering throughout the receiver front-end. This approach would take many years to get installed on the entire fleet of aircraft, since it would require new standards to be developed, new TSOs to be issued by the FAA, new receivers to be built and certified to the new standard, and finally installed within the fleet of aircraft that operate within U.S. airspace. This would be extremely disruptive to NextGen implementation, since it would cost billions of dollars and likely 7-10 years to retrofit the aircraft fleet after several additional years to develop new standards.

Thus, no viable short-term options based on changes to GPS receivers or antennae were identified in the report.

REPORT RECOMMENDATIONS

The main recommendations from this aviation GPS receiver operational assessment are:

1. From an aviation perspective, LightSquared upper channel operation should not be allowed.

2. Further study is recommended to more carefully determine a refined terrestrial base station power versus frequency limit to verify the conclusions for a LightSquared deployment scenario that involves only the lower 10 MHz channel at 1526-1536 MHz.

On this last point, the study indicated that terrestrial base station operations at the lower 5 MHz wide channel (1526.3-1531.3 MHz) is compatible with aviation GPS operations for all the representative scenarios (including both signal tracking and initial acquisition).

CONCLUSION

On behalf of the hard working and committed volunteers of SC-159, thank you for the opportunity to testify on this important topic. As the President of RTCA, I am gratified by the trust the FAA places in our committees to forge consensus on such challenging and critical aviation issues. The work of this committee, conducted in a very short three months, determined that the proposed LightSquared terrestrial wireless broadband network would have adverse effects on GPS receivers onboard aircraft.

I'd be pleased to respond to your questions.

REFERENCES

RTCA Document No. RTCA/DO-327, "Assessment of the LightSquared Ancillary Terrestrial Component Radio Frequency Interference Impact on GNSS L1 Band Airborne Receiver Operations," issued June 2011.

RTCA Document No. RTCA/DO-316, "Minimum Operational Performance Standards (MOPS) for Global Positioning System/Aircraft Based Augmentation System Airborne Equipment," issued April 2009.

RTCA Document No. RTCA/DO-229D, "Minimum Operational Performance Standards for Global Positioning System/Wide Area Augmentation System Airborne Equipment," issued Dec. 2006. (Initial issuance, January 1996)

RTCA Document No. RTCA/DO-253C, "Minimum Operational Performance Standards for Global Positioning System/Local Area Augmentation Airborne Equipment," issued December 2008. (Initial issuance, January 2000)

U.S. Department
of Transportation
**Federal Aviation
Administration**

RTCA Paper No. 047-11/PMC-881

MAR 3 2011

Ms. Margaret Jenny
President
RTCA Inc.
1828 L Street, NW., Suite 605
Washington, DC 20036

Dear Ms. Jenny:

The 1525-1559 MHz and 1626.5-1660.5 MHz bands have been allocated for many years for mobile satellite service (MSS) communications (e.g., Inmarsat).

A few years ago a United States satellite company "LightSquared" (previously called Mobile Satellite Ventures (MSV), then SkyTerra) started a process with the Federal Communications Commission (FCC) to also allow terrestrial communications in the 1525-1559 MHz band. These "ancillary terrestrial components", or *ATC*[1], were terminals that were an integral part of the MSS network. The stated intent was to act as "gap fillers" to allow the company to service users in areas where the satellite signals had difficulty reaching (e.g., cities and "urban canyons" where buildings caused blockages of the satellite signals). After considerable study that approach was approved, and in fact was recently updated based on agreements between LightSquared and Inmarsat.

In November 18, 2010, LightSquared requested to the FCC to amend their license to allow them to service terminals that are not combined MSS/terrestrial, rather are simply just purely terrestrial terminals. In the longer term that capability could be leased-out by LightSquared making it impossible for the *ATC* portion to be an "integral part of the satellite network", rather it would simply become another cellular-type service. This raised the concern that the number of such terminals will increase. In fact, the current projection is that the number of these terminals will explode to an order of magnitude more than previously proposed. This presents a potential interference threat to the aviation community which is increasingly relying on Global Positioning System (GPS) L1 for navigation for not only approach and landing, but for enroute (automatic dependent surveillance broadcast) and surface navigation on airport tarmac.

The Federal Aviation Administration (FAA) believes that studies using the new assumptions need to be undertaken to ensure protection of the GPS. These studies should include

[1] For this document *ATC* in italics refers to ancillary terrestrial component and not air traffic control. Due to confusion on the topic some have started writing the acronym as ATCt and the international term for *ATC* is complementary ground component (CPG).

receiver vulnerability, as well as scenario studies including aggregate effects of LightSquared transmissions on GPS receivers used in aircraft.

After reviewing the current terms of reference, we have determined that the evaluation of this potential interference is already within the scope of Special Committee 159. Therefore, I would like to add this issue to those already being addressed by SC 159. In order to provide timely input to the FAA, this evaluation will need to be completed quickly. LightSquared is required by the FCC to help organize and fully participate in a working group that includes the GPS community and federal agencies to study the potential for overload to GPS devices and to identify any measures necessary to prevent harmful interference to GPS. LightSquared will submit a final report by June 15 to the FCC. The RTCA evaluation should proceed in parallel, with a deliverable to the FAA by June 3.

Please let me know as soon as possible your response to this request at (202) 267-9722 or by e-mail at robert.frazier@faa.gov.

Sincerely,

Robert A. Frazier
Acting Group Manager, Spectrum
Engineering Services

Executive Summary

This report documents a study conducted by RTCA Special Committee 159 in response to a request from the Federal Aviation Administration to address the issue of compatibility between the operation of a terrestrial wireless broadband network in the bands 1525-1559/1626.5-1660.5 MHz by LightSquared, pursuant to its FCC license, and GPS receivers onboard aircraft. The report addresses the issues analytically based on existing domestic and international standards and includes results of tests of four certified aircraft GPS receivers.

The study concludes that the current LightSquared terrestrial authorization would be incompatible with the current aviation use of GPS, however modifications could be made to allow the LightSquared system to co-exist with aviation use of GPS. The study's conclusions and recommendations are strictly based on an assumed set of operational parameters for the LightSquared system and identified source mitigations. These operational parameters would produce less Radio Frequency Interference (RFI) than if LightSquared were to operate at its fully-authorized limits.

In addition, the analysis is based upon the assumption that all equipment is minimally compliant with the interference rejection requirements in harmonized domestic and international standards. Additionally since GPS is an aviation safety service, the analysis includes a 6 dB safety margin as is standard practice. Results from the four receivers tested show that these receiver models are significantly more resilient to interference from the LightSquared terrestrial base stations than limits derived from the standards.

The impact of a LightSquared upper channel spectrum deployment is expected to be complete loss of GPS receiver function. Because of the size of the single-city station deployment, GPS-based operations below about 2000 feet will be unavailable over a large radius from the metro deployment center (assuming no other metro deployments are nearby). Given the situation in the high altitude U.S. East Coast scenario, GPS-based operations will likely be unavailable over a whole region at any normal aircraft altitude.

The results of this study indicate that terrestrial base station operation at the lower 5 MHz wide channel (1526.3 – 1531.3 MHz) is compatible with aviation GPS operations for all the representative scenarios (including both signal tracking and initial acquisition). The study indicates that for terrestrial base stations using only the lower 10 MHz channel at 1526-1536 MHz, there is a small positive margin for GPS tracking (but not necessarily initial acquisition) in the presence of mean aggregate terrestrial network interference. As noted above, these conclusions are based upon specific assumptions about LightSquared operation.

The main recommendations from this aviation GPS receiver operational assessment are:

1. From an aviation perspective, LightSquared upper channel operation should not be allowed.
2. Further study is recommended to more carefully determine a refined terrestrial base station power versus frequency limit considering:
    a. determination of the lowest path loss for the low altitude enroute scenario,
    b. confirmation of acceptable receiver susceptibility for GPS initial acquisition and signal tracking in the presence of the 10 MHz bandwidth terrestrial network interference,
    c. computation of the cumulative probability distribution function for the aggregate path loss.

Curriculum Vitae

Margaret T. Jenny
President
RTCA, Inc.

Margaret Jenny is the President of RTCA, Inc., a private, not-for-profit corporation dedicated to the development of consensus-based recommendations regarding aviation issues. RTCA functions as a federal advisory committee.

From 2001-2008, Ms. Jenny served as Chief Executive Officer of MJF Strategies, LLC, an aviation consulting firm. Prior to forming MJF Strategies in 2001, Ms. Jenny was Vice President of Corporate Business Development at ARINC. Ms. Jenny's previous positions include: Director of Airline Business and Operations Analysis for US Airways (1996-1998) and Technical Director at The MITRE Corporation (1983-1996).

Ms Jenny holds an AB degree in Sociology from Indiana University (Bloomington, IN) and an MS degree in Computer Science from American University (Washington, DC). She has served on numerous boards and advisory committees including the National Academy of Sciences, the National Transportation Research Board Committee, and the FAA's Research Engineering and Development Advisory Committee. She has received numerous awards, including the Aviation Week and Space Technology Laurel (1997).

COMMITTEE ON TRANSPORTATION AND INFRASTRUCTURE

Truth in Testimony Disclosure

Pursuant to clause 2(g)(5) of House Rule XI, in the case of a witness appearing in a nongovernmental capacity, a written statement of proposed testimony shall include: (1) a curriculum vitae; and (2) a disclosure of the amount and source (by agency and program) of each Federal grant (or subgrant thereof) or contract (or subcontract thereof) received during the current fiscal year or either of the two previous fiscal years by the witness or by an entity represented by the witness. Such statements, with appropriate redaction to protect the privacy of the witness, shall be made publicly available in electronic form not later than one day after the witness appears.

(1) Name: Margaret T. Jenny, President, RTCA, 1828 L Street, NW, Suite 805, Washington, DC 20036 202-330-0650

(2) Other than yourself, name of entity you are representing: I am representing RTCA, Inc.

(3) Are you testifying on behalf of an entity other than a Government (federal, state, local) entity?

YES X **If yes, please provide the information requested below and attach your curriculum vitae.**

NO

(4) Please list the amount and source (by agency and program) of each Federal grant (or subgrant thereof) or contract (or subcontract thereof) received during the current fiscal year or either of the two previous fiscal years by you or by the entity you are representing:

RTCA receives membership dues from several government organizations, but these are not grants or contracts. Contract numbers for these are listed below:

FAA- DTFAWA-10-A-80009
Army – W91QV1-11-T-0065
Air Force – FA8101-11-T-0027
Navy – N0001900MDACTLL
NASA – NNX07AA23C

Signature

6 · 21 · 2011
Date